coreIPM®

PLATFORM MANAGEMENT SOLUTIONS

coreIPM is a management architecture for platform management. It is designed to manage systems that can range from an individual board to more complex configurations that can be made up of any combination of boards, blades, enclosure controllers, and multiple enclosure aggregations.

coreIPM is compliant with the Intelligent Platform Management Interface (IPMI) specification v2.0 + PICMG ® 3.0 R2.0 AdvancedTCA, PICMG® AMC.0 R2.0 Advanced Mezzanine Card and PICMG ® MTCA.0 MicroTCA R1.0 specification extensions for blades and micro blades.

coreIPM provides monitoring, control and inventory tracking functions. It can monitor sensors such as those for temperature, voltage, fan operation, power supply, security, hardware errors and provide logging and alerts. Control functions enable power control and resets. Inventory tracking makes field replaceable unit data available for management.

coreIPM architecture is comprised of :
coreBMC (Baseboard Management Controller) and ***coreSMC*** (Shelf Management Controller) hardware & software modules.

coreBMC has IPMI, ATCA, AMC, MicroTCA support built in the code base. Specific features are enabled at build time. ***coreBMC*** also incorporates all shelf management functions except the higher level networking and high availability protocols. It can handle ATCA shelf management functions such as power, cooling, e-keying and state management.

coreBMC is fully sufficient by itself to provide board management functions for applications such as :
- ATCA blade, fan tray, lightweight shelf manager,
- AMC carrier & AMC blade,
- MicroTCA (Carrier mgr, Power module, Cooling unit),
- OPMA module,
- Motherboard IPMI controller,
- Smart power strips,
- Stand alone appliances.

Coupled with ***coreSMC*** it's possible to build shelves and higher hardware hierarchies such as an ATCA chassis.

coreSMC incorporates networking stack + RCMP + SNMP + WEBEM + access control + high availability functions.

coreBMC

coreBMC integrates all system management functions into an off-the-shelf single chip microcontroller.

Mix/match microcontroller

Full support for the NXP 32-bit ARM7 based LPC2xxx and Cypress Semiconductor 8-bit nvPSoC microcontroller families.

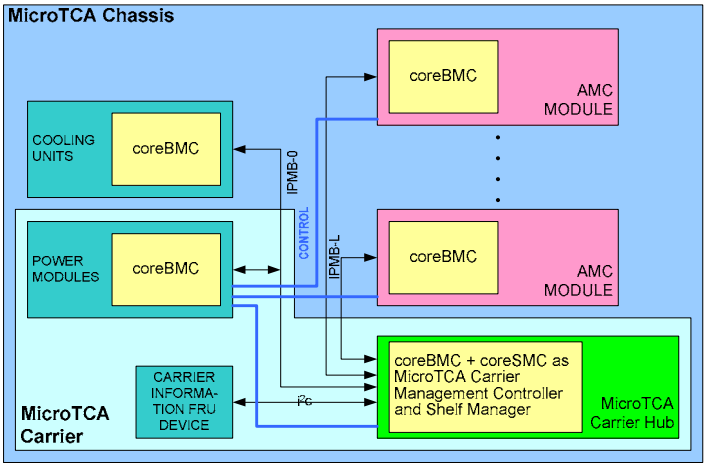

MicroTCA application of *coreIPM*

Supported hardware features

- i²c : IPMB, LM7x based temp sensors
- General Purpose timers. Watchdog timer
- General purpose IO pins for latches, LEDs, e-keying and other uses. Edge or level sensitive interrupt pins.
- RS232
- SPI : port expanders, SEEPROM, LPC
- ADC
- PWM/tach fan control
- Real-time clock with battery backup
- In circuit FLASH programming
- Ethernet (on select microcontrollers)
- USB (on select microcontrollers)

Development

Full set of development tools using either gcc or commercial compilers and debuggers from multiple vendors. JTAG interface enables program downloads and on-chip debugging.

coreSMC

Shelf management functions are delegated between the ***coreBMC*** microcontroller and the ***coreSMC*** code.

coreSMC shelf manager is POSIX based and runs on any hardware platform. Developing, debugging & testing can be done on a desktop then the code can be transferred to an embedded system. Uses ***coreBMC*** as a front end and provides RCMP+, CLI, SNMP, HPI plugin, web browser interfaces.

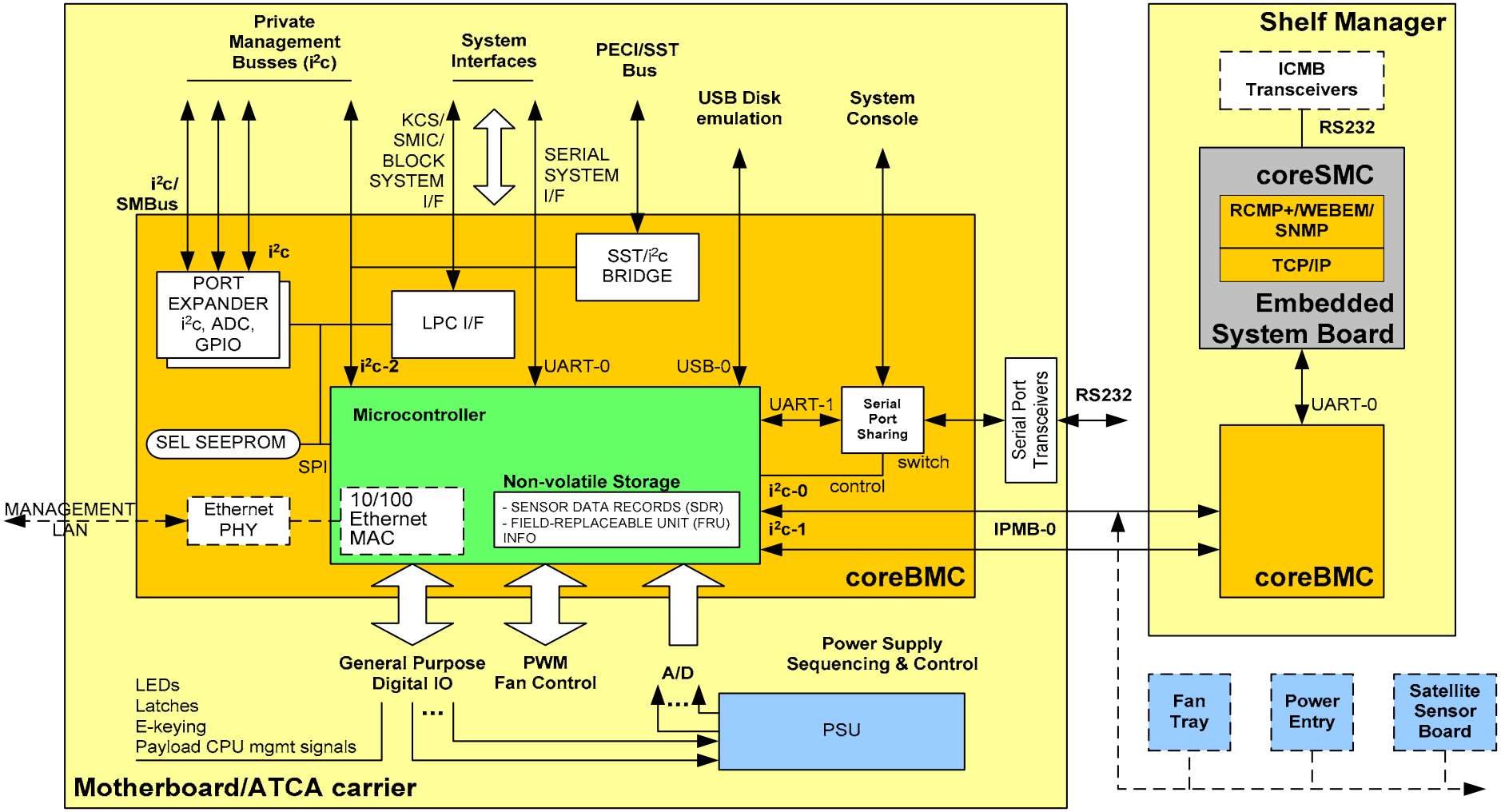

coreIPM System Architecture

Licensing

Source code is available under the Open Source GNU General Public License (GPLv2) and commercial licensing. ***coreIPM*** project has full ownership of the source and can provide alternative licensing. Commercial licensees get a commercially supported product without a requirement that their ***coreIPM***-based software be open sourced.

For further information: *info@coreipm.com*