Building an AMC system with coreipm

1) Check out the code
Under linux or cygwin (with svn installed) you can simply type
```
$ svn checkout http://coreipm.googlecode.com/svn/trunk/ ./coreipm
```

You can also use a GUI SVN client such as TortioseSVN

2) Build the test setup
The code is configured for our reference design. We sell the ADB1 AMC Proto Board to physically implement this design. This is a small card with an AMC card edge connector that accepts an Olimex LPC-H2148 header dev board. The schematics for ADB1, and the connector pinouts are given in the following pages.

ADB1 can be purchased from http://www.coreipm.com/boards

You can purchase the Olimex LPC-H2148 daughterboard from these vendors
sparkfun
microcontrollershop
Here's the schematic for LPC-H2148

3) Build the firmware
If you have Keil installed you can double click on one of these projects depending on which compiler you wish to use

mmc_rv.Uv2 – RealView compiler
mmc_gcc.Uv2 – gcc compiler
mmc_carm.Uv2 – CARM compiler

Build project.

Eclipse/CrossWorks build instructions – to be added

4) Apply power to ADB1
3v3 to P1. The red LED on LPC-H2148 should come on.

5) Attach serial cable

```
PC                          ADB1
Pin3 (TX)  +--------+ Pin3 (RX)
Pin2 (RX)  +--------+ Pin2 (TX)
```

```
Pin7 (RTS) +--------+ Pin8 (CTS)
Pin8 (CTS) +--------+ Pin7 (RTS)
Pin5 (GND) +--------+ Pin5 (GND)
```

Set your PC serial port to 9600 Baud, 2 start,1 stop bits, no HW handshaking

6) Attach JTAG pod to LPC-H2148 & download firmware.
Alternatively you could load the firmware from the serial port.

Omce the processor isrunning, you should start getting debug messages from the serial port.

7) Plugging into a uTCA chassis
Detach PSU & JTAG. Jumper JP1. Plug into chassis.

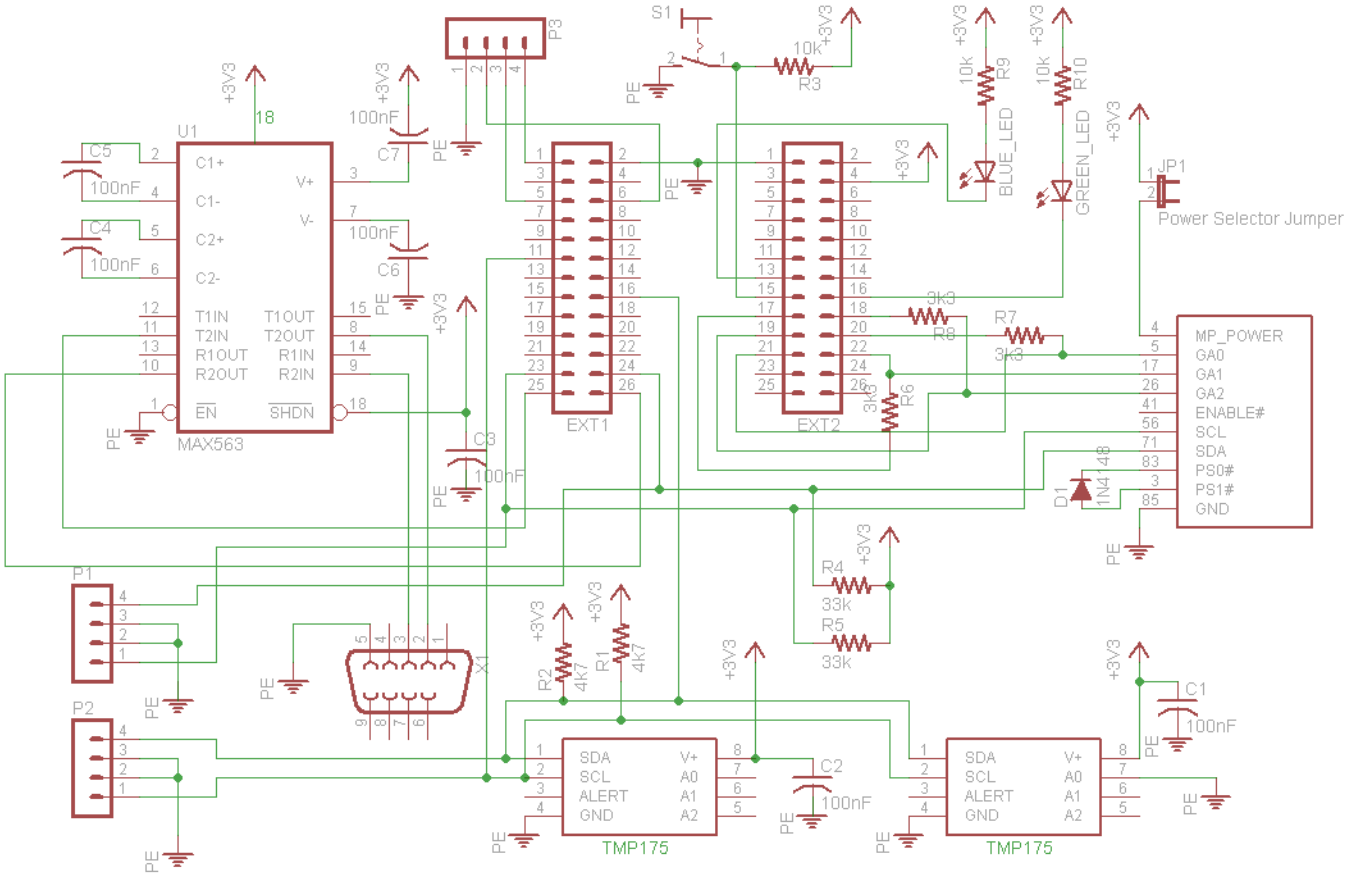

ADB1 Schematic

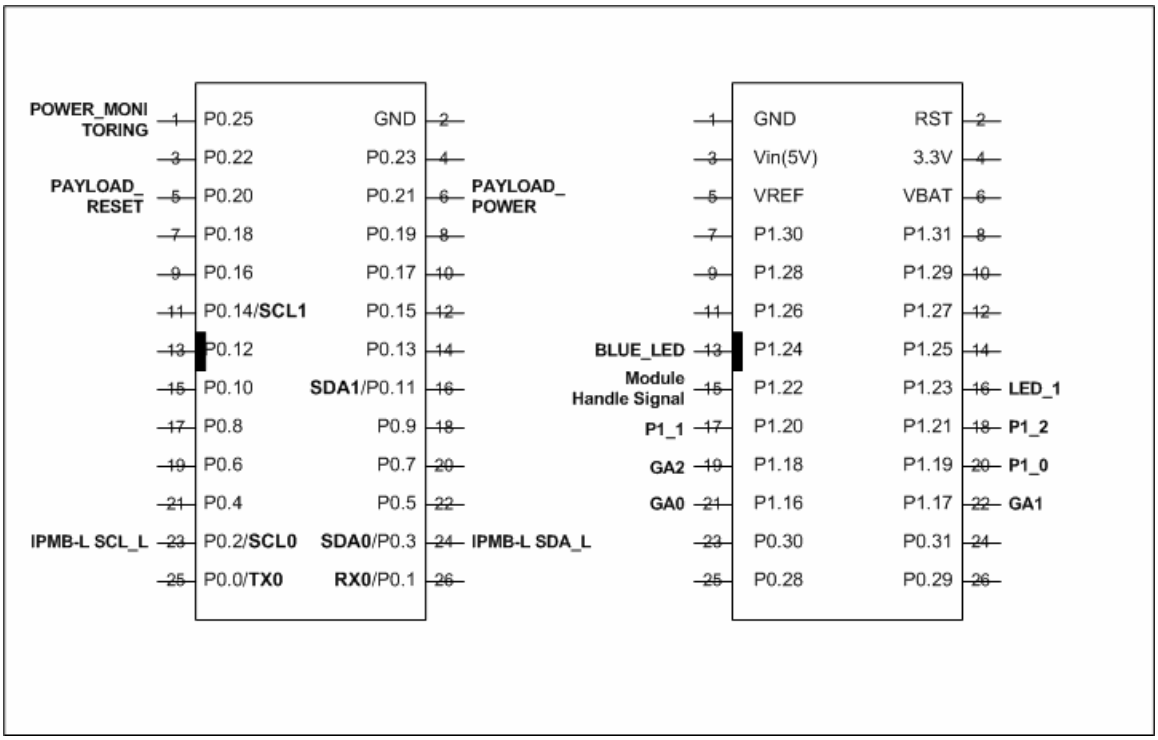

LPC-H2148 header connections to ADB1

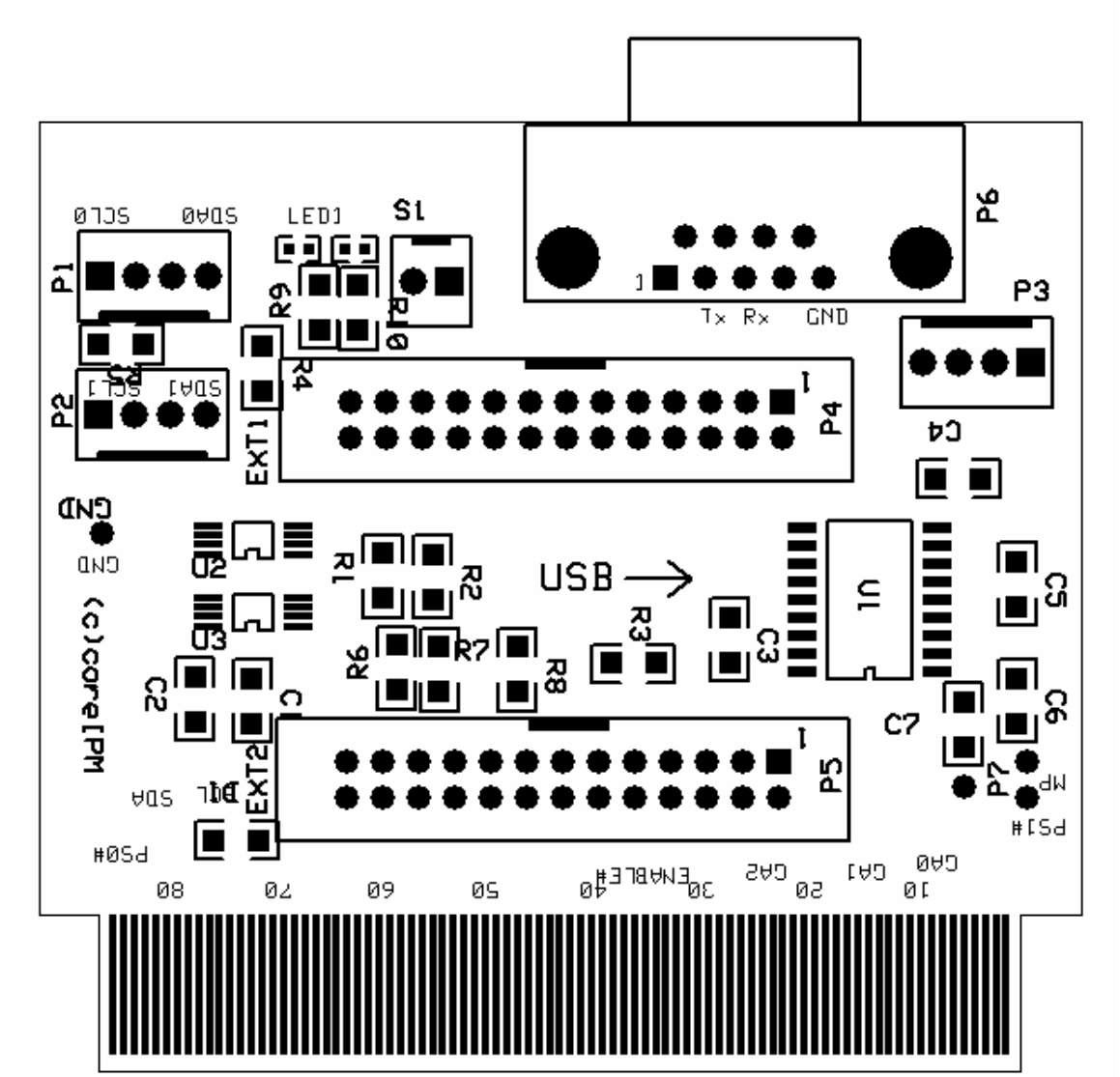

ADB1 physical layout